# 9.5 LCD SECTION
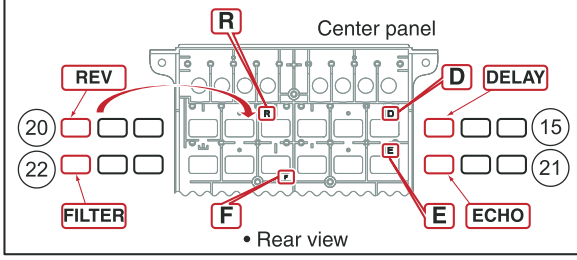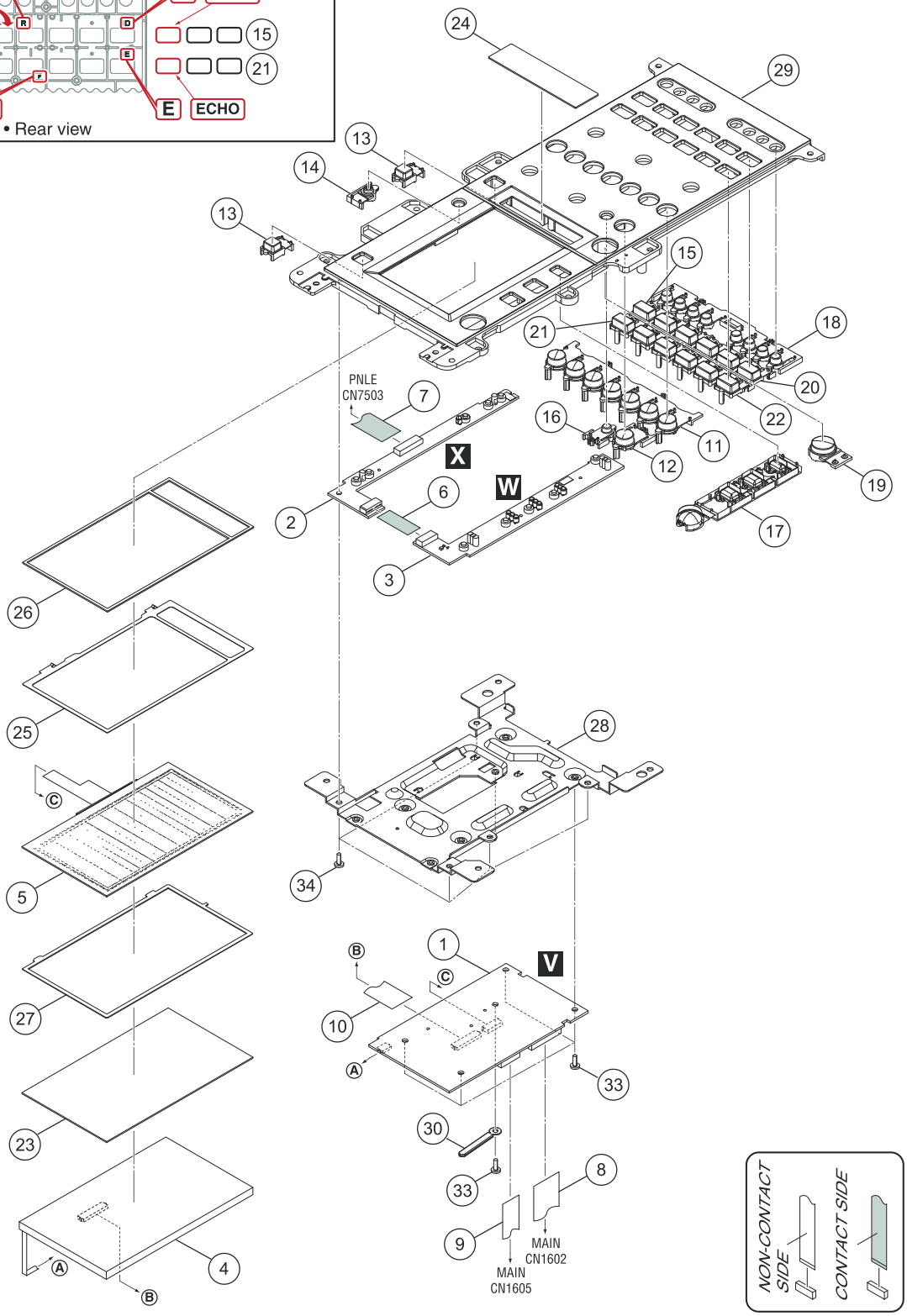
**Note:**
The shape of the groups of buttons 15, 20, 21, and 22 is the same. To identify the attachment position of each group of buttons during reassembly, the initial letter of the name of the left button of a group is engraved on the back of the Center panel (No. 29).